TLOCRT:
M 1:50
GROUND PLAN

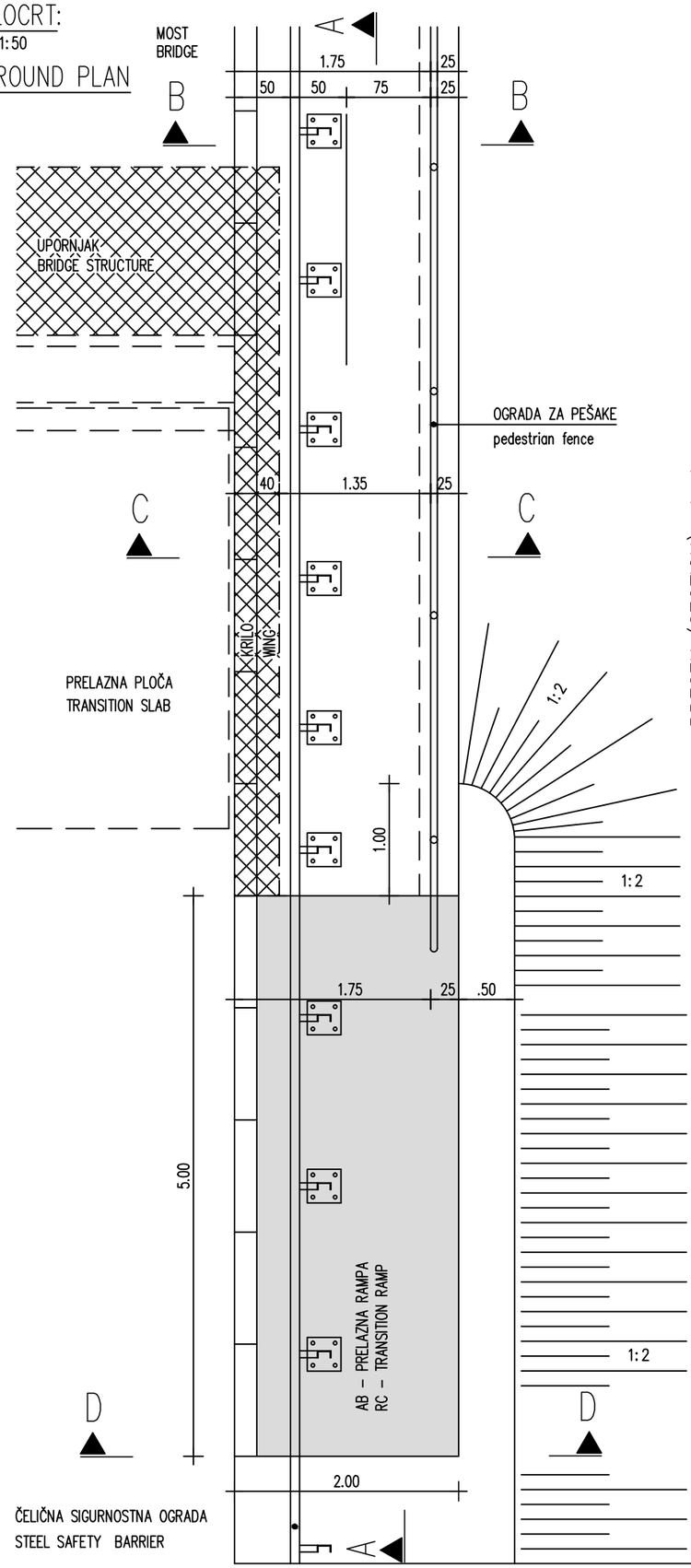

PRESEK (SECTION): A–A
M 1:50

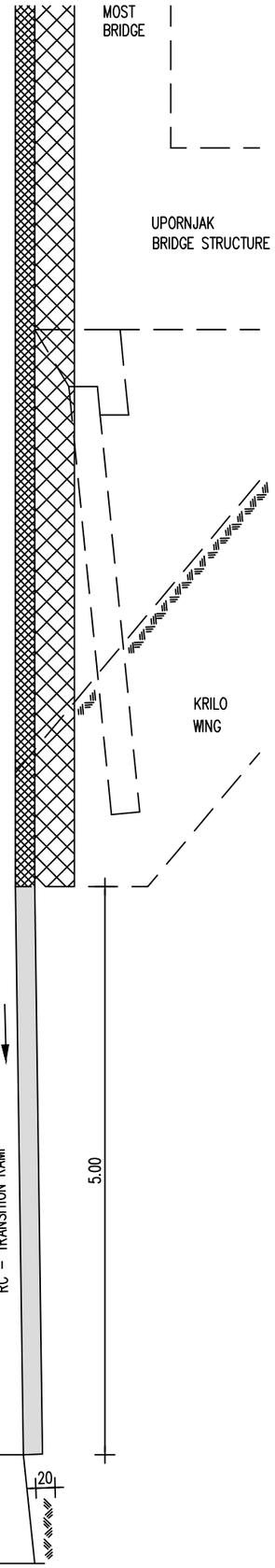

NACRT IVIČNJAKA:
M 1:50
PLENE OF KERBS

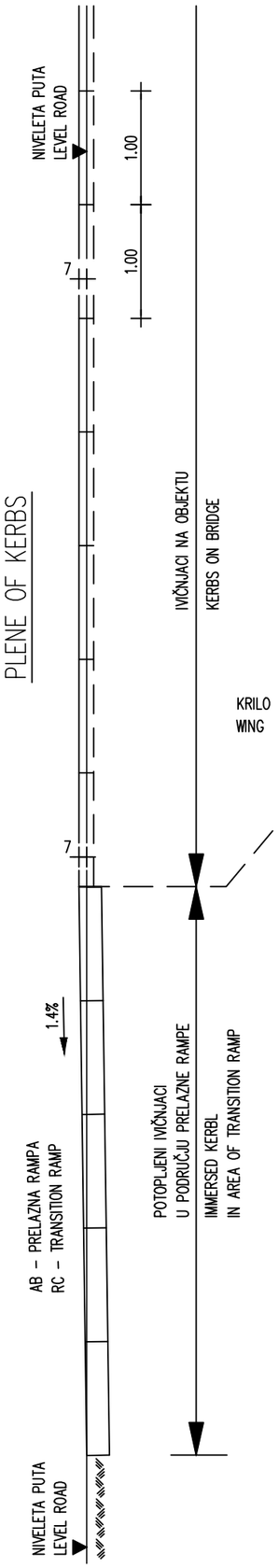

PRESEK (SECTION): B–B
M 1:50

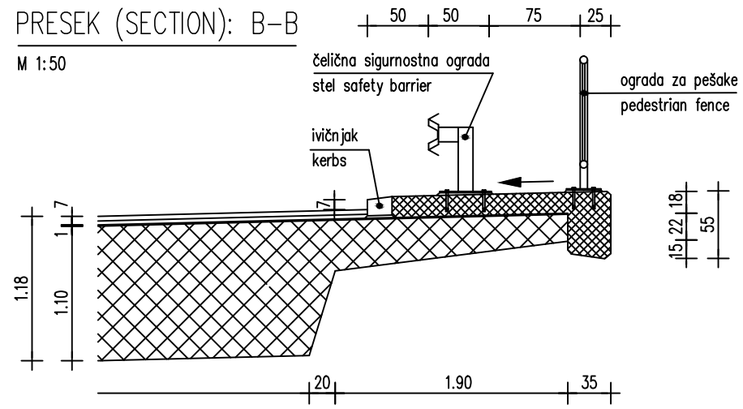

PRESEK (SECTION): C–C
M 1:50

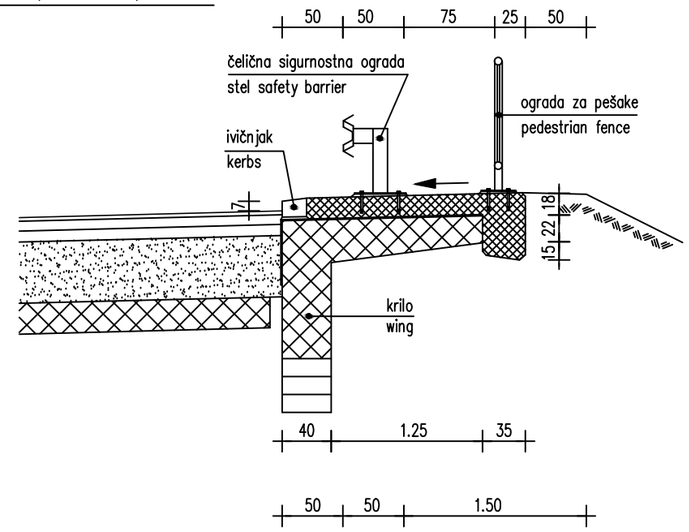

PRESEK (SECTION): C–C
M 1:50

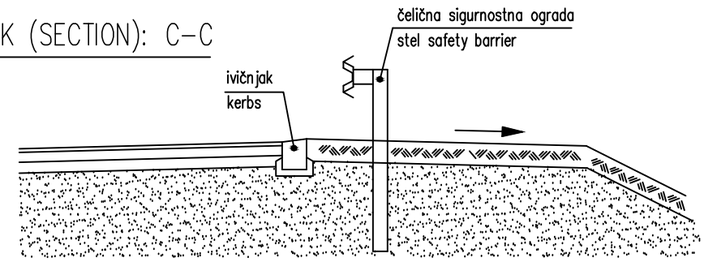

br./no.	promena/change	datum/date	ime/name

klijent/client: ЈАВНО ПРЕДУЗЕЋЕ ПУТЕВИ СРБИЈЕ

naslov/title: SRSDD Standardni crteži putnih detalja u Republici Srbiji
SRSDD Serbian road standard detail drawings

crtež/drawing: Spoj hodnika sa bankinom puta, ivičnjak h =7cm
Joint of a walkoway with the shoulder of a road,
kerb heigt 7 cm

merilo/scale: 1:50	datum/date: 30.04.2012	strana/page: 6.15.1